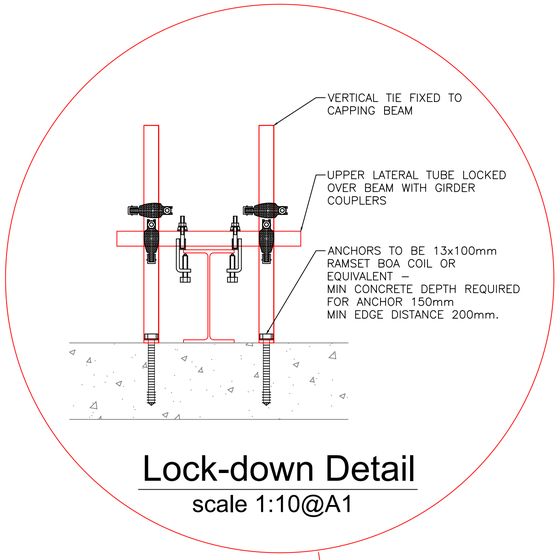

Lock-down Detail

scale 1:10@A1

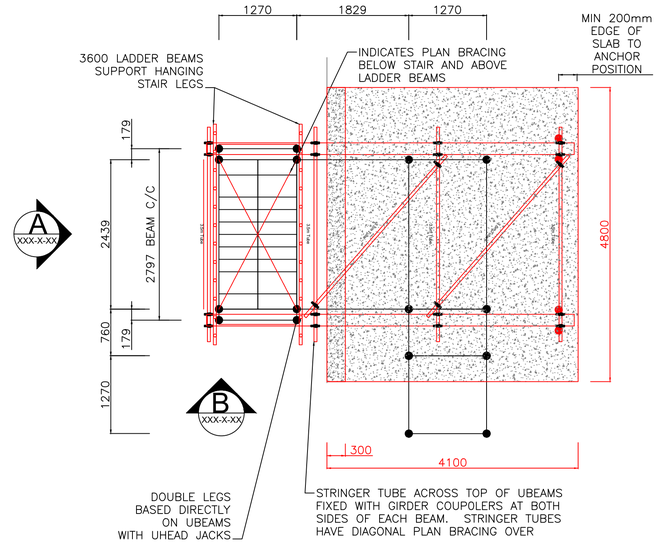

= Plan View

XXX-X-XX scale 1:50@A1

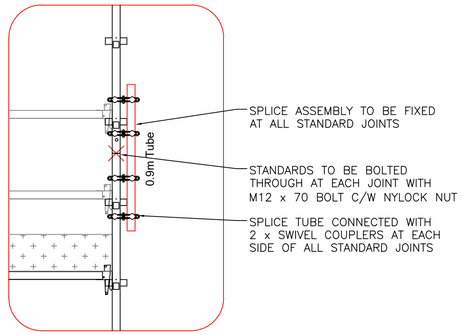

Standard Splicing Detail

NTS

A Elevation

XXX-X-XX scale 1:50 @ A1

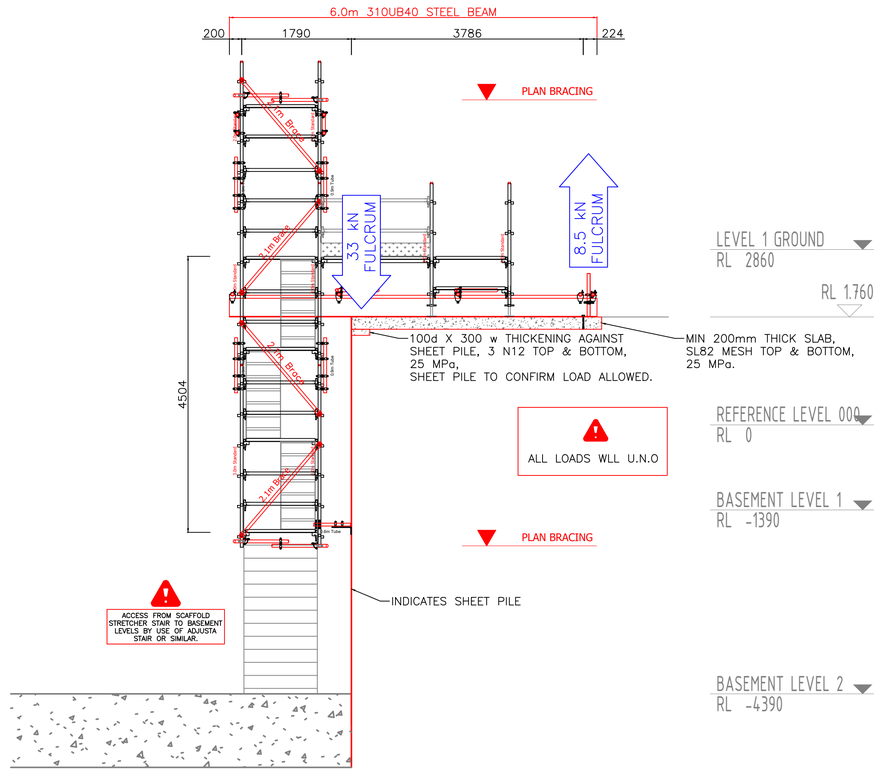

B Elevation

XXX-X-XX scale 1:50 @ A1

HUTCHINSON BUILDERS 1912 • 2022 110 YEARS

Amendments

Rev	Amendment	By	Chkd	Date
A	details	P.Smith	G.RUmph	11-7-22
B	details	P.Smith	G.Rumph	19-7-22
C	details	P.Smith	D.Boyce	27-7-22

Drawing Notes

1. HUTCHINSON BUILDERS COPYRIGHT
This drawing is the copyright of HUTCHINSON BUILDERS. No unauthorised use, reproduction or disclosure is to be made and it is to be returned upon request. The drawing is subject to the company's standard conditions as applicable. Hutchinson Builders Scaffold Department reserves the right to amend drawing details and material components subject to stock availability.

2. BASIS OF DESIGN
This drawing has been prepared from information supplied to us by, or on behalf of the Site Team, who should check that we have correctly interpreted their requirements and that where applicable, all loadings, dimensions, details, erection, pouring and striking sequences etc, are as required and practicable.

This drawing has been prepared in accordance with the relevant Australian Standards and Codes of Practice as well as Hutchinson Builders Scaffolding Supply Manual.

To enable us to complete this drawing we have allowed for the following;
- AS/NZS 1576.1:2019 Scaffolding-General Requirements
- AS/NZS 1576.2:2016 Scaffolding Couplers and Acc.
- AS/NZS 1576.3:2015 Scaffolding and Prefabricated & T&C.
- AS/NZS 4576:2020 Guidelines for Scaffolding
- QLD Scaffolding Code of Practice 2021

3. APPLIED LOADS
Applied loads (unless otherwise indicated) where applicable.

Falsework;
Self weight of concrete - 25.0 kN/m
Self weight of formwork - 0.30 kN/m
Live load - 4.0 kN/m

Access;
Working deck levels .....1..... no. at .....450..... kg per bay
Working hop-up levels .....1..... no. at .....125..... kg per bay
Total deck levels .....1..... no.
Total hop-up levels .....4..... no.

Wind;
Wind Loads, where applicable, have been calculated in accordance with AS/NZS 1170.2:2021 If wind speeds are likely to exceed 100kph, removal of specified lining is to be undertaken as per Single Leg Tie Certification.

4. FOUNDATION / SUPPORT
Where equipment is supported, suspended, anchored or tied to an existing structure or the ground, the site team must ensure that the structure or ground is adequate to safely support the additional imposed loads.

Minimum ground compaction (GC) calculation based on sole board size -

.....950..... kg / .....0.225..... m / .....0.5..... m = ...8445..... kg/m²

convert from kg/m2 to kPa,

.....8445..... kg/m2 / .....102.....= .....83.....kPa.

5. MODIFICATION
When scaffold design changes are required the subcontractor must seek approval from the scaffold department. When the required changes to the design have no adverse effect on the structural capacity/intention of the existing scaffold design the scaffold department may authorise the change, in which case the following procedure is to be implemented by the suitably trained High Risk Work License holder;
1 - Alter scaffold design to represent new configuration clearly indicating the bay dimensions and TWP height.
2 - Write the editors name, date, high risk work license number and sign the drawing next to the changes that have been made.
3 - Keep a copy of the design changes in the Hutchinson Builders site team office so that these changes can be produced on request.

For design changes that fall outside the above criteria, a draft design should be drawn on site by the subcontractor. This draft should then be sent to the nominated Hutchinson Builders scaffold designer for the project so that the scaffold design changes can be updated and re-engineered

6. TYING & BRACING
The Sub Contractor is responsible for ensuring all scaffold structures remain adequately tied and/or braced to carry the load and ensure stability.

Ties (both slab and raker) are to be fitted as per the Single Leg Tie Certification and drawings. No ties or braces are to be removed or altered in any way without permission from the Hutchinson Builders Scaffold Department.
The supply and fixing of all necessary ties is the responsibility of the Sub-Contractor.

7. DESIGN OUTPUT
Unless indicated otherwise, all loads shown are not factored.
Maximum calculated leg load = ...N/A..... kN
Lift positions and bracing frequency to be as shown.

Maximum calculated tie load = ...6..... kN

Tie type :- .....MECHANICAL ANCHOR OR 'F' TYPE.....
All leg loads within form support scaffold to be specified by engineer.

The following drawing numbers are to be read in conjunction with the scaffold design:
- 100-4-01 - Title Sheet
- 100-4-02 - Single Leg Tie Detail - Low Rise
- 100-4-03 - Single Leg Tie Detail - High Rise
- 100-4-04 - Typical Tie Details
- 100-4-05 - Typical Access and Opening Details
- 100-4-06 - Typical Bracing and Tie Staging Detail

*****DO NOT TAKE RISK! - IF IN DOUBT, ASK*****
Hutchinson Scaffold Plant Registration Number - Q22287

HUTCHINSON SCAFFOLD DEPARTMENT
12 GEBBIE STREET, BOWEN HILLS
Tel: (07) 3414 9115

HUTCHINSON BUILDERS Established 1912

TITLE
Cantilevered Construction Stair
Eve Residence
180 Marine Pde
Labrador

DRAWN	DATE	DEPOT	CAD FILE
P.Smith	1-7-22	Brisbane	1105
CHECKED: G.Rumph	DRAWING No: 1105-3-17		REVISION: C
SCALE: as shown			

DRAWING STATUS
PRELIMINARY